GOYO OPTICAL INC.

Industrial Lens

1inch Format High Resolution Lenses

Item No.GMHR412514MCN

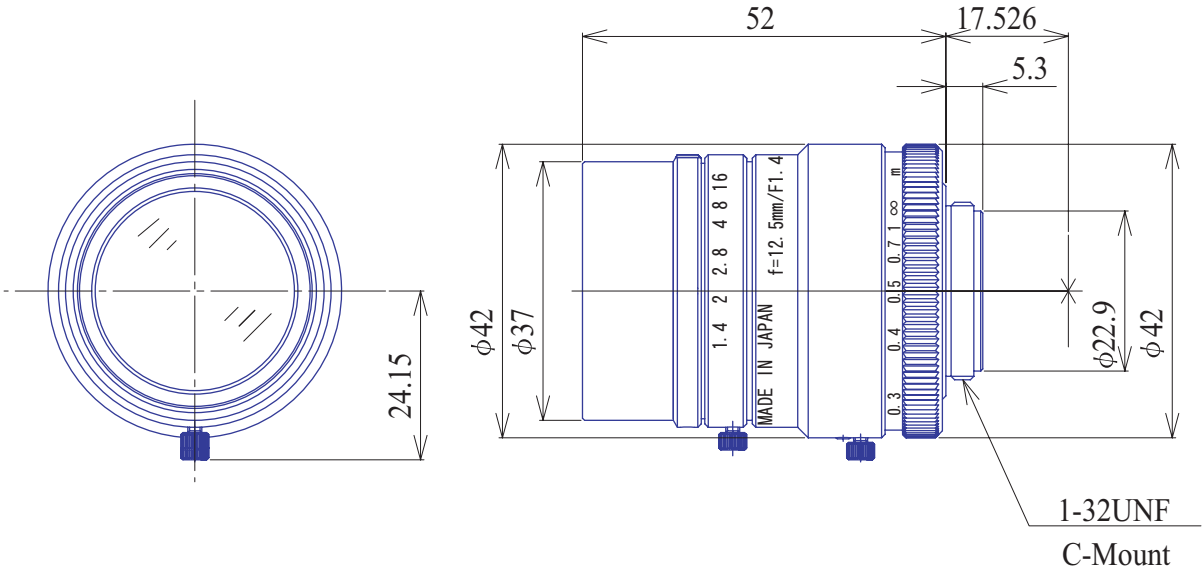

ITEM NO.	GMHR412514MCN
Focal Length	12.5 (mm)
Iris Range	F1.4 - 16
Angle of View (Hx V x D) 1"	55.6°x 42.5°x 67.7°
MOD	0.3 (m)
Filter Thread	M=35.5 , P=0.5
Dimention (D x L)	ϕ42 x 52 (mm)
Weight	150 (g)

GOYO OPTICAL Inc.

Japanese Office

3-8-31 HAMAZAKI,
ASAKA,
SAITAMA 351-0033,
JAPAN,
TEL:048-474-2235
FAX:048-474-7373
E-MAIL:info@goyooptical.com

German Office

KURHAUSSTR,3
ROOM N'19
D-55543 BAD KREUZNACH
GERMANY
TEL:0671-4822255
FAX:0671-43603
E-MAIL:info@goyooptical.com